[illegible]

1. [illegible] 5.3+5.4 [illegible]

2. [illegible] 3-2 [illegible]

[illegible] [illegible]

□□□□:

[例 3] 在水平方向的匀强磁场中，有一个正方形闭合线圈绕垂直于磁感线的轴匀速转动，已知线圈的匝数为 $N=100$ 匝，边长为 20 cm，电阻为 10 Ω，转动频率 $f=50$ Hz，磁场的磁感应强度为 0.5 T，求：

(1)外力驱动线圈转动的功率；

(2)当线圈转至线圈平面与中性面的夹角为 30°时，线圈产生的感应电动势及感应电流的大小；

□□□□□□□□□□□ = □□□□□□□□□
= □□□□□□

1. 如果两个频率相同的交变电流相位差是 π 或 π 的奇数倍，即 $\varphi_2-\varphi_1=(2n+1)\pi$ ($n=0,1,2,\cdots$)，则称它们为反相，即变化步调始终相反.

2. 如果它们的相位差是 0 或 2π 的整数倍，即 $\varphi_2-\varphi_1=2n\pi$ ($n=0,1,2,\cdots$)，则称为同相，即变化步调始终相同.

[illegible] ([illegible])(2017· [illegible]) [illegible]

[illegible]

[illegible] : [illegible]

[illegible] : [illegible]

A. [illegible] L_1 [illegible]

B. [illegible] C_2 [illegible]

√

C. [illegible]

D. [illegible]

√

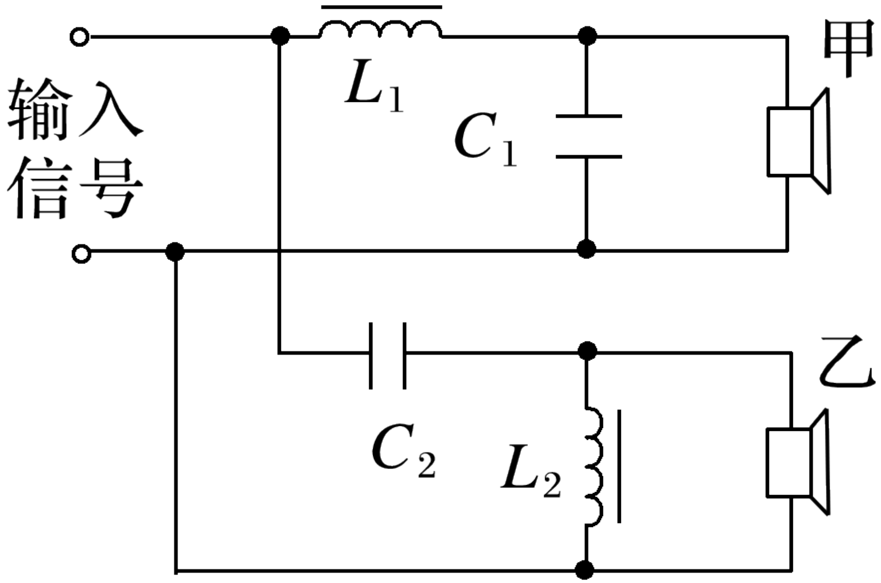

[illegible]

1. [illegible]
2. [illegible]
3. [illegible].

[illegible]

[illegible] ([illegible]) [illegible]

[illegible] ([illegible]) [illegible]. [illegible].

(1) [illegible]

[illegible] **1.** [illegible] - [illegible]

(2) [illegible]

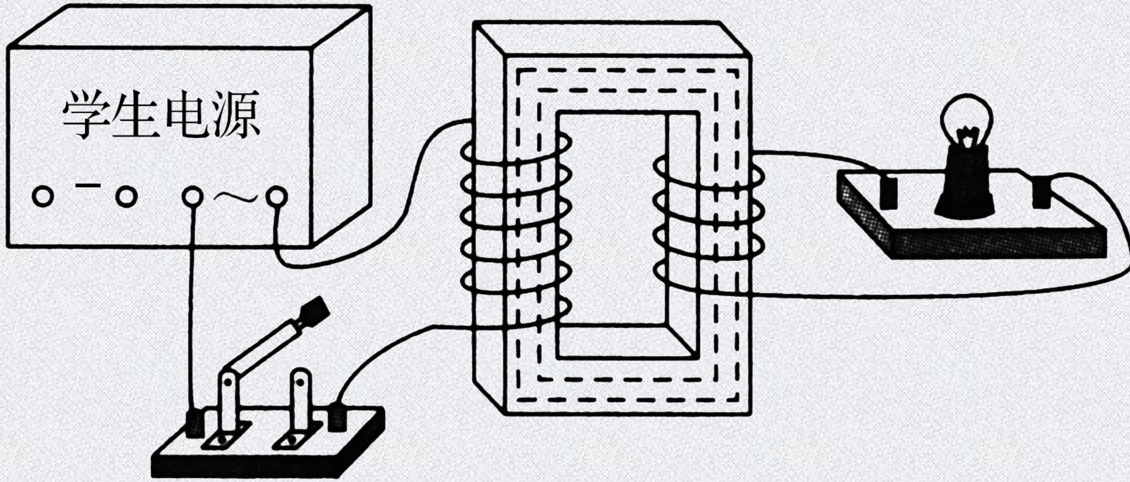

2. [illegible]

[illegible]

1. [illegible].

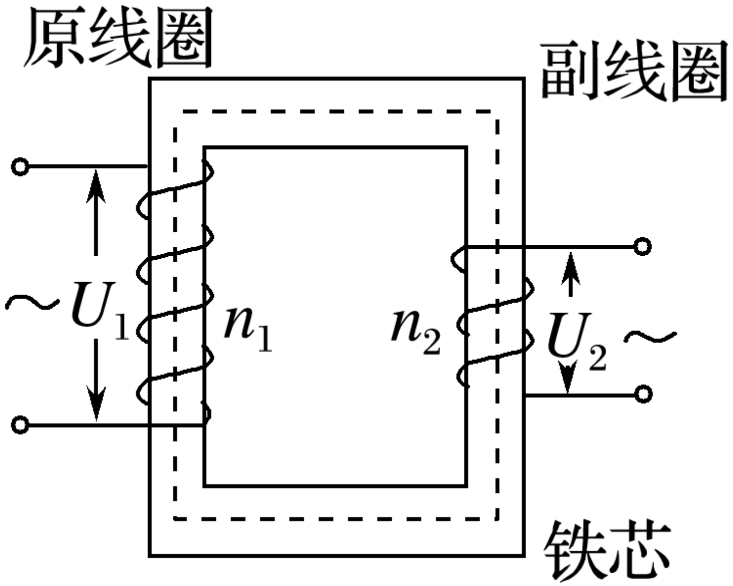

变压器的示意图

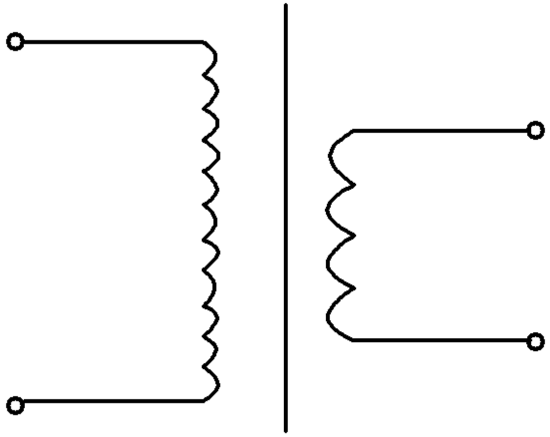
变压器在电路图中的符号

[illegible]

(1) [illegible]

[illegible]

(2) [illegible]

[illegible]

(1) [illegible]([illegible] n_1 [illegible])[illegible]([illegible] n_2 [illegible]). [illegible] U_1 [illegible]

[illegible]

[illegible] U_2 [illegible]________[illegible].

[illegible]　　　　[illegible]

(2) [illegible]________[illegible]________.

[illegible]　　　　[illegible]

(3) [illegible]____[illegible]________.

2. [illegible] __[illegible]__ [illegible]

[illegible] $\frac{\Delta\Phi}{\Delta t}$ [illegible] n_1 [illegible] U_1 [illegible] $n_1\frac{\Delta\Phi}{\Delta t}$ [illegible]

[illegible] n_2 [illegible] U_2 [illegible] $n_2\frac{\Delta\Phi}{\Delta t}$ [illegible] $\frac{U_1}{U_2}$ [illegible] $\frac{n_1}{n_2}$.

[illegible] **I-B-φ** [illegible]

( ) $n_1 : n_2$

$1:2$ U_1 $220\sqrt{2}\sin \omega t$ (V) n_1 1 100

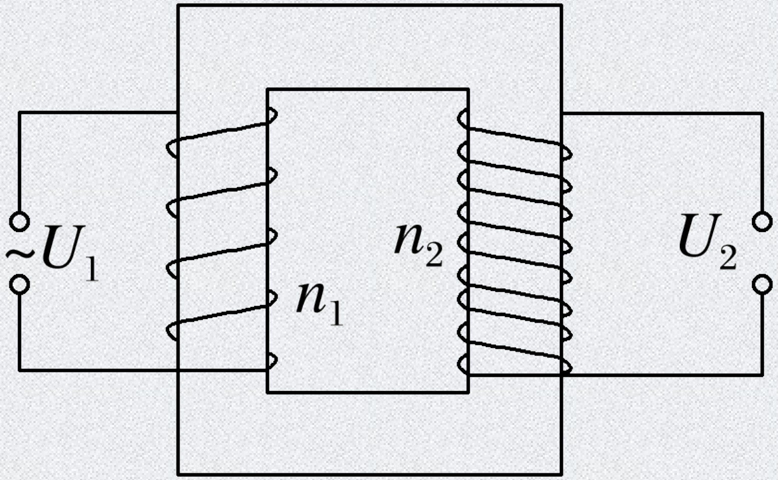

1:2

[illegible]

[illegible]

(1) [illegible]

[illegible]. [illegible]

[illegible] $P_{[illegible]}$[illegible]$P_{[illegible]}$.

(2) [illegible].

[illegible] [illegible] P[illegible] = P[illegible]，[illegible] $U_1I_1 = U_2I_2$.

[illegible] $\frac{I_1}{I_2} = \frac{U_2}{U_1} = \frac{n_2}{n_1}$.

(3) [illegible].

[illegible] $P_1 = P_2 + P_3 + \ldots$，

[illegible] $U_1I_1 = U_2I_2 + U_3I_3 + \ldots$

[illegible] $U_1:U_2:U_3:\ldots = n_1:n_2:n_3:\ldots$ [illegible]

$n_1I_1 = n_2I_2 + n_3I_3 + \ldots$

[illegible].

□□□□□□□□□□□□□□□ 60 V □□□□□□□□□□□□□□□□□□□□□□□□ .

□□□□ S □□□□□□□□□□□□□□□□□□□□□□□ (□□□□□□) □□□□□□

220 V □ 2.2 A. □□□□□□□□□ (　　　　)

A. □□□□□□□□ 484 W

B. □□□□□□□□□□□□□□□ 0.6 A

√C. □□□□□□□□□□□□□□□ 2.2 A

D. □□□□□□□□□□□ $n_1:n_2$ □ 11:3

√

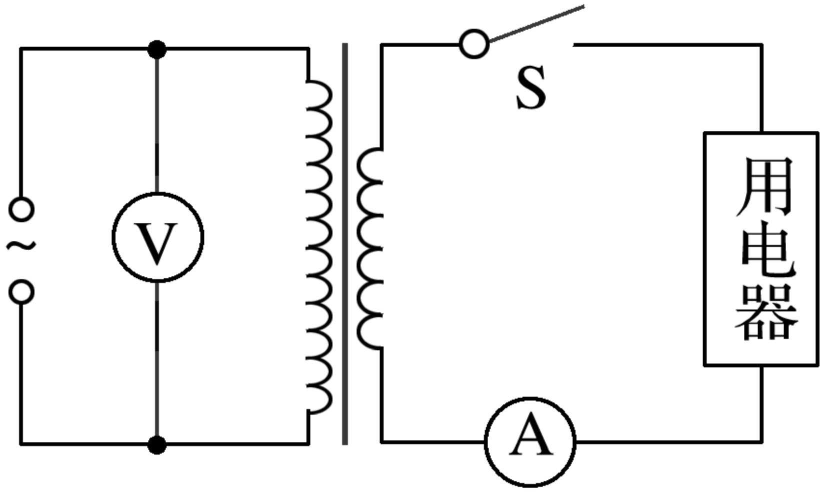

[illegible] [illegible] n_1 [illegible] 100 [illegible] n_2 [illegible] 5 [illegible] n_3 [illegible] 10 [illegible] L_1 [illegible]
" 2 V 2 W" [illegible] L_2 [illegible]" 4 V 4 W" [illegible] . [illegible] L_1 [illegible] L_2 [illegible]
[illegible]

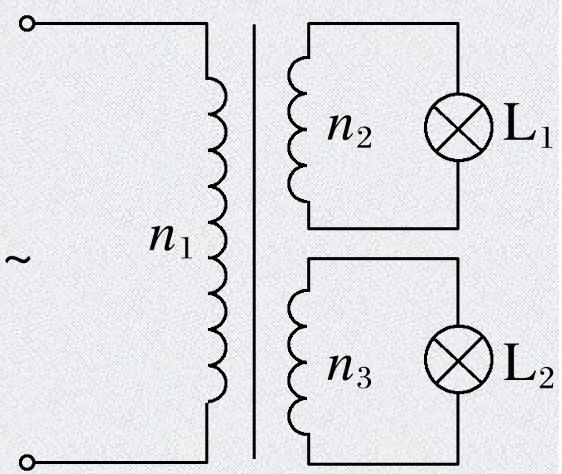

A. 40 V $\frac{1}{20}$ A

B. 6 V $\frac{1}{20}$ A

√ C. 40 V $\frac{3}{20}$ A

D. 6 V $\frac{3}{20}$ A

$$U_1 : U_2 : U_3 = n_1 : n_2 : n_3$$

$$n_1I_1 = n_2I_2 + n_3I_3$$

[illegible]

L ( )

A

B

√ C

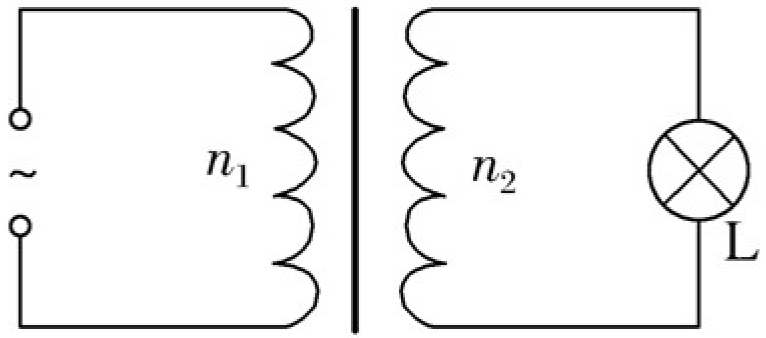

D

□

□□□□□□□□□□□

1. □□□□□□□□□□□□□

(1)□□□□□□□□□□□□□□□□□□ $\frac{n_1}{n_2}$□□□□□□□□ U_1□□□□

□□ U_2□□ U_2□ $\frac{n_2U_1}{n_1}$.

(2)□□□□□ $P_{□}$□□ $P_{□}$□ $P_{□}$□□□ $P_{□}$□□□ $P_{□}$□□□ $P_{□}$□□□ $P_{□}$□0□ $P_{□}$□0□ $P_{□}$□□□

□□□□□□□

(3)□□□□□□□□□□□□□□□□□□□□ $\frac{n_1}{n_2}$□□□□□□□□ U_1□□□□□□□

□□□□□□ I_2□□□□□□□□□ I_1□□ I_1□ $\frac{n_2I_2}{n_1}$(□□□□□□□□).

2. [illegible]

(1) [illegible]

[illegible] $R \to I_2 \to P$ [illegible] $\to P$ [illegible] $\to I_1$ [illegible]

(2) [illegible]

[illegible] n_1 [illegible] $n_2 \to U_2 \to I_2 \to P$ [illegible] $\to P$ [illegible] $\to I_1$.

[illegible] ([illegible])(2019· [illegible]) [illegible]

[illegible] Q [illegible] R_0 [illegible] R [illegible] P [illegible] .

[illegible] U [illegible] . [illegible]

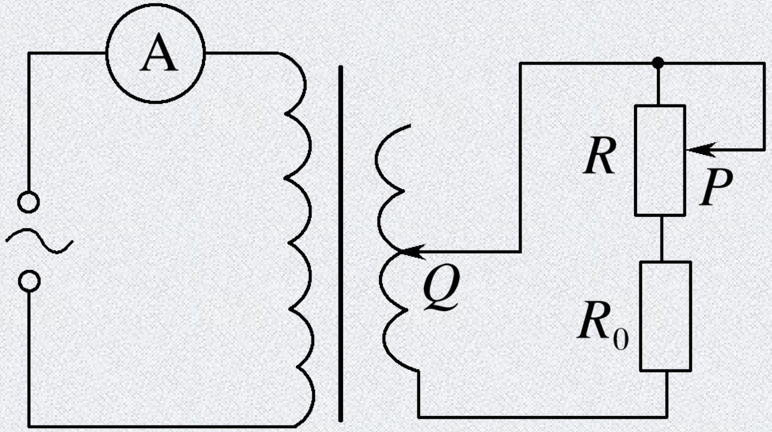

A. [illegible] Q [illegible] P [illegible]

√ [illegible]

B. [illegible] Q [illegible] P [illegible]

[illegible]

C. [illegible] P [illegible] Q [illegible]

√ D. [illegible] P [illegible] Q [illegible]

AB. [illegible]

CD. [illegible]

1. [illegible]

[illegible]

[illegible].

[illegible] $\frac{U_1}{U_2}$ [illegible] $\frac{n_1}{n_2}$ [illegible] $\frac{I_1}{I_2}$ [illegible] $\frac{n_2}{n_1}$.

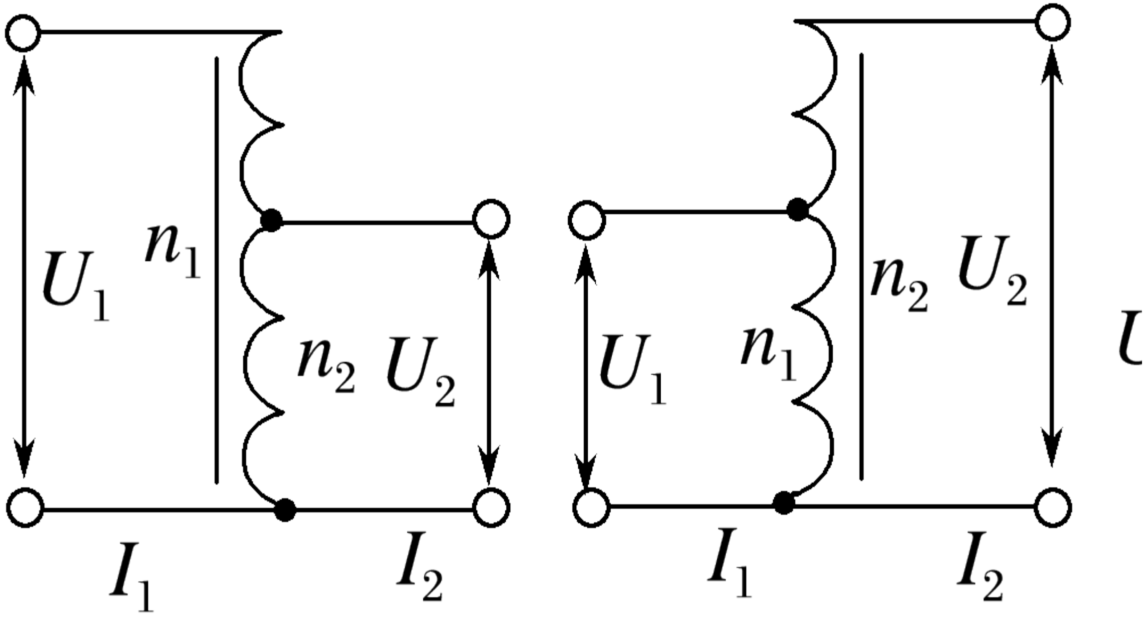

甲　　乙

2. [illegible]

(1) [illegible].

(2) [illegible]______[illegible]______.

(3) [illegible]____[illegible]____[illegible].

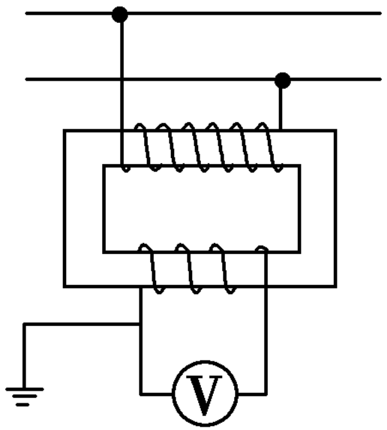

电压互感器

甲

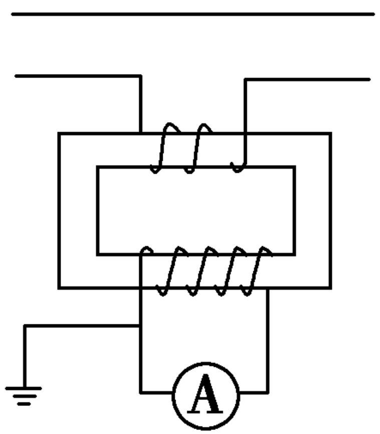

电流互感器

乙

3. [illegible]

(1) [illegible].

(2) [illegible]________[illegible]. [illegible]________.

(3) [illegible]____[illegible]____[illegible].

[illegible]

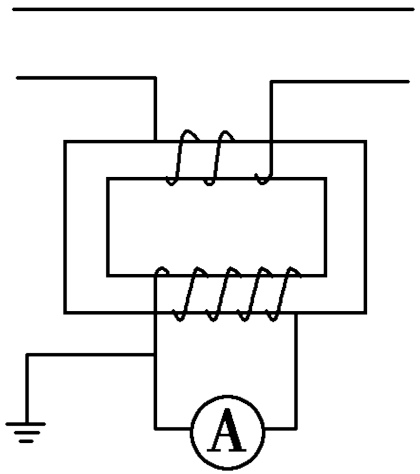

电流互感器

乙

□□□□□□□□□□□□□□□□□□□□□□□□□□□□□□ a □ b □□□□□□□□□□□□□

□□□□□□□□□□□ c □ d □□□□□□□□ a □ b □□□□□□□ U_1 □□□□□

□□ c □ d □□□□□□□□□ U_2 □□□□□□□□ M □□□□□□□ N □□□□□

A□ $U_2>U_1$ □ U_2 □□　　B□ $U_2>U_1$ □ U_2 □

C□ $U_2<U_1$ □ U_2 □□　　D□ $U_2<U_1$ □ U_2 □

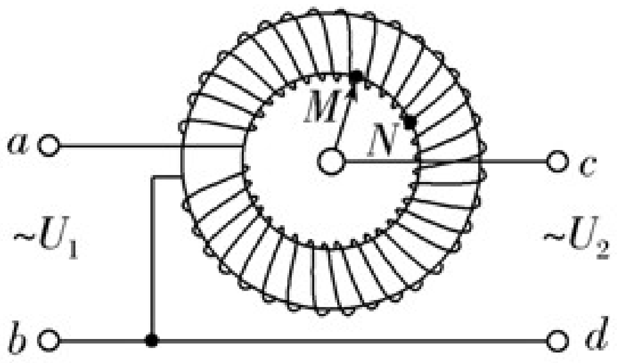

□□　□ $\frac{U_1}{U_2}$ □ $\frac{n_1}{n_2}$ □ $n_1>n_2$ □ $U_2<U_1$ □□□□□□ M □□□□□□□□ N □□

□□ n_2 □□□□ U_2 □□□□ C □□□□

(1) [illegible] $U_1 > U_2$ [illegible] $n_1 > n_2$ [illegible]

(2) [illegible] $I_1 > I_2$ [illegible] $n_1 < n_2$.

(3) [illegible]

[illegible].